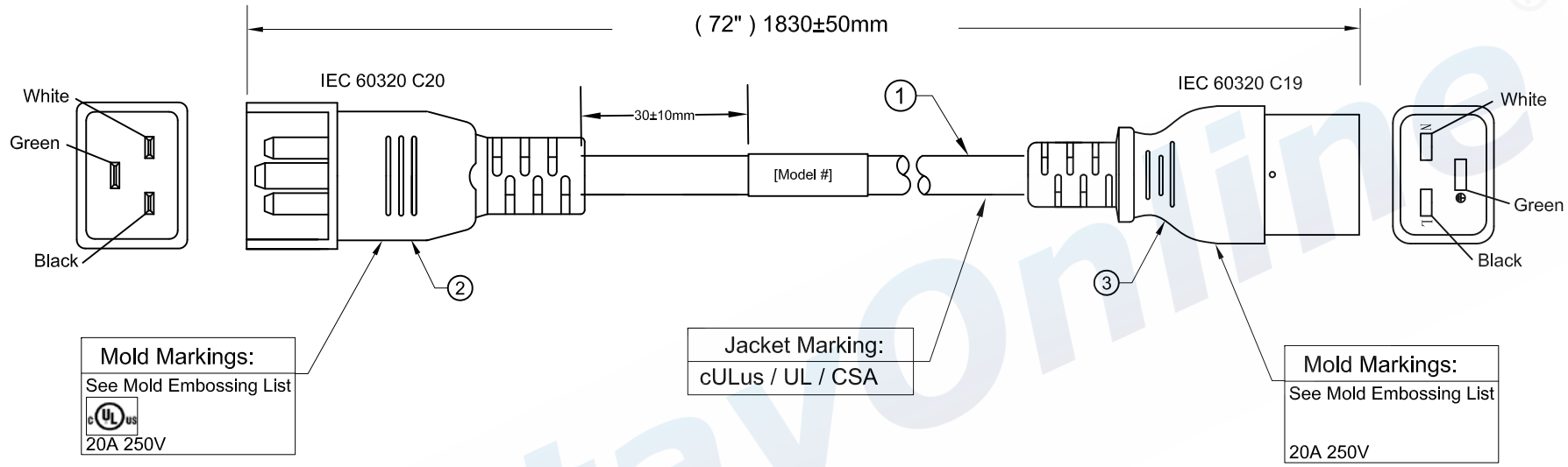


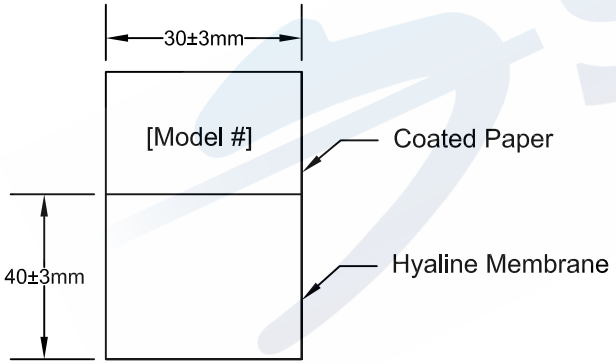


**Packing: Bundled to Ease Installation**

| No. | Specification | QTY | Remarks |
|---|---|---|---|
| 1 | SJT 12/3c 105°C Black | 1 PC | |
| 2 | Plug IEC 60320 C20 Black | 1 PC | |
| 3 | Connector IEC 60320 C19 Black | 1 PC | |
| 4 | LABEL: (40+30) * 30 mm | 1 PC | |

| Mold Embossing List | |
|---|---|
| Vendor File # | |
| Power Fig | E250704 |
| Stay Online | E250704 |
| Yung Li | E152635 |
| SSEMCO | E340286 |
| Scolmore | E361125 |
| Volex | E62405 |
| Well Shin | E115330 |

| Tolerances |
|---|
| > 0 ± 0.30 mm |
| >1.0 ± 0.50 mm |
| >10.0 ± 1.0 mm |
| >20.0 ± 2.0 mm |
| Angle: ± 1° |

| | | | | | | | |
|---|---|---|---|---|---|---|---|
| Approved | | Date | | StayOnline® | | | |
| Checked | | Date | | Customer | | | |
| Drawn | JRP | Date | 21Mar2018 | Model # | PFC2012E72 | | |
| Item No. | 2928 | | | Material | PVC | Units | mm |
| Drawing No. | 2928 | Rev. | B | Scale | | | |